INDUSTRIA ALIMENTARE
FOOD INDUSTRY

IMPIANTO PER CONSERVE - TOMATO PLANTS

Code: D1377
Chain: P.50 x 15 x Ø20Roller
Breaking load = 7.500 daN

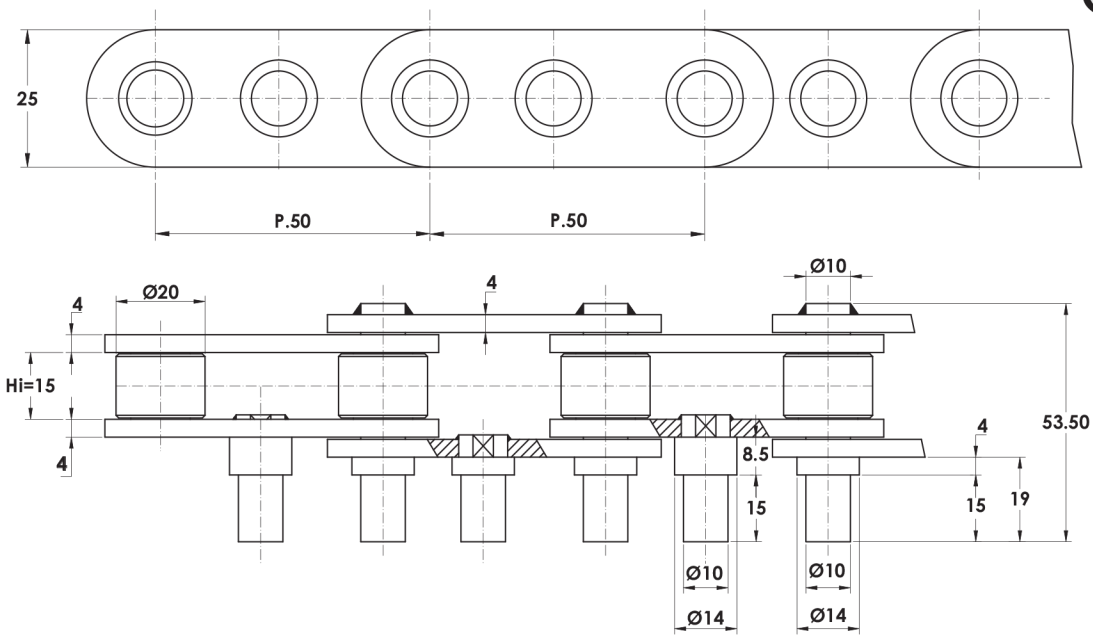
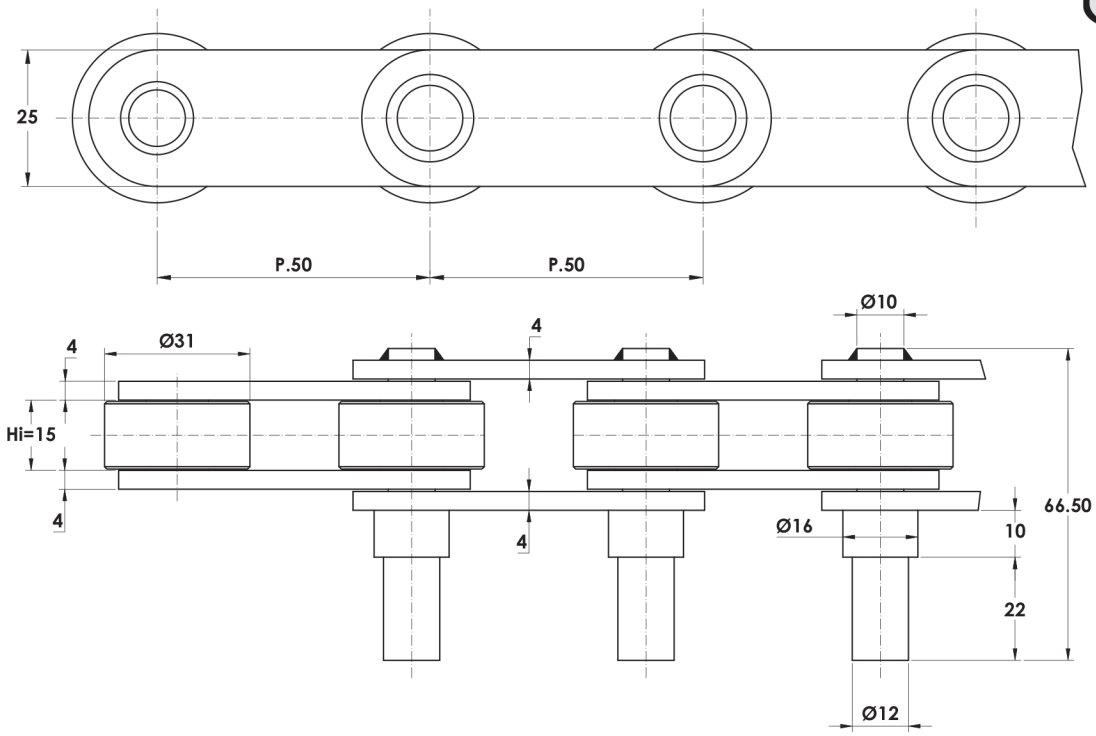
Code: D1796
Chain: P.50 x 15 x Ø31Roller
Breaking load = 8.200 daN